http://www.a2zsubjects.com

Roll No. .....

Y–314

M. A./M. Sc. (First Semester)
EXAMINATION, Dec., 2014
MATHEMATICS
Paper Fifth
(Advanced Discrete Mathematics–I)

Time : Three Hours] *[Maximum Marks : 80*

Note : Solve any *two* parts from each Unit. All questions carry equal marks.

Unit—I

1. (a) Define Tautology. If $H_1, H_2, \ldots\ldots, H_m$ and P imply Q, then prove that $H_1, H_2, \ldots\ldots, H_m$ imply $P \rightarrow Q$.

   (b) Define the following :
   (i) Quantifiers
   (ii) Semigroups
   (iii) Monoids
   (iv) Propositional logic

   (c) Demonstrate that R is a valid inferenee from the premises $P \rightarrow Q, Q \rightarrow R$ and P.

http://www.a2zsubjects.com

Join our WhatsApp Channel for FREE Question Papers, Syllabus & Exam Updates
More papers: cguniversities.com | Tap here to join
JOIN NOW >

http://www.a2zsubjects.com

Unit—II

2. (a) State and prove Basic Homomorphism theorem.

(b) Define the following :

(i) Homomorphism of Semigroups and Monoids

(ii) Congreuenee relation and Quotient semigroup

(c) Let $< S, * >$, $< T, \Delta >$; and $< V, \oplus >$ be semigroups and $g : S \to T$ and $h : T \to V$ be semigroup homorphisms. Then $(h \circ g) : S \to V$ is a semigroup homomorphism from $(S, *)$ to $(V \oplus)$.

Unit—III

3. (a) Define Distributive lattice. Let $(L, *, \oplus)$ be a distributive lattice. For any $a, b, c \in L$ prove that :

$$(a * b = a * c) \wedge (a \oplus b = a \oplus c) \Rightarrow b = c$$

(b) Find the value of :

$$x_1 * x_2 * [(x_1 * x_4) \oplus x_2' \oplus (x_3 * x_1')]$$

for $x_1 = a, x_2 = 1, x_3 = b$ and $x_4 = 1$,

where $a, b, 1 \in B$ and the Boolean algebra $\langle B, *, \oplus, ', 0, 1 \rangle$ is shown in figure.

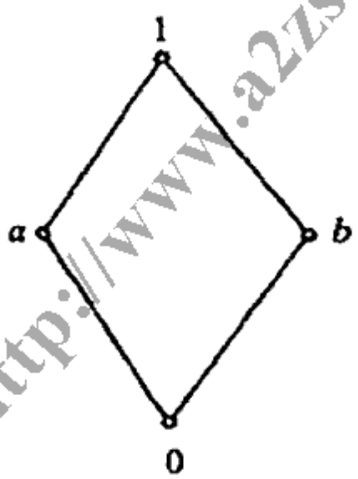

Fig. 1

http://www.a2zsubjects.com

Join our WhatsApp Channel for FREE Question Papers, Syllabus & Exam Updates
More papers: cguniversities.com | Tap here to join
JOIN NOW >

http://www.a2zsubjects.com

(c) Define the following :

(i) Direct product of Homomorphism

(ii) Complete lattice

(iii) Subalgebra

Unit—IV

4. (a) Consider the circuit given below which provides output for the Boolean function z.

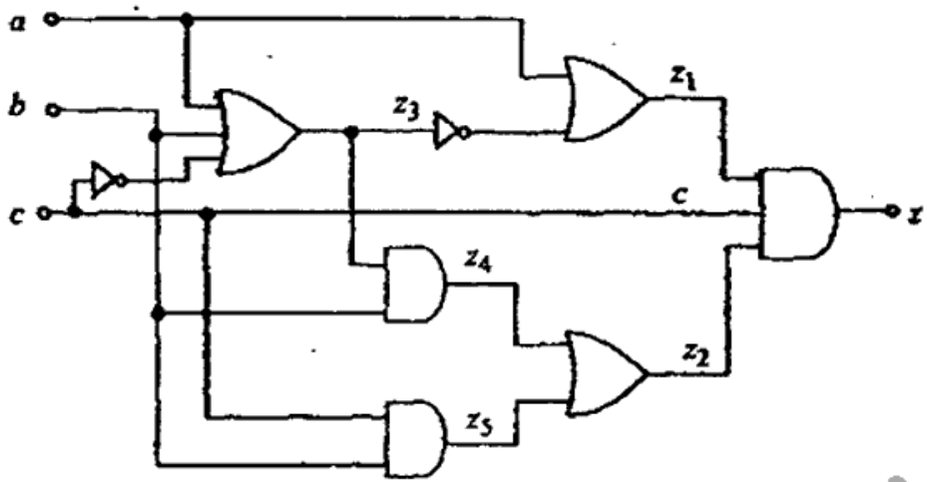

Fig. 2

Obtain the minimal Boolean function z using boolean identities.

(b) Use the Karnaugh map representation to find a minimal sum-of-product of the following function :

$$f = \Sigma(10, 12, 13, 14, 15)$$

(c) Define gates and draw the logical expression with inputs a, b and output f where :

$$f = \left(a.\bar{b}\right) + (\bar{a}.b)$$

Unit—V

5. (a) Define Polish Notation and prove that the rank of any well formed polish formula is 1 and the rank of any proper head of a polish is greater than or equal to 1.

http://www.a2zsubjects.com

Join our WhatsApp Channel for FREE Question Papers, Syllabus & Exam Updates
More papers: cguniversities.com | Tap here to join
JOIN NOW >

http://www.a2zsubjects.com

(b) Define language and show that the language L (G) = $\{a^n b\, a^n; n \geq 1\}$ is generated by grammar :

G = $(\{S, c\}, \{a, b\}, S, \phi)$ where ϕ is the set of production $S \rightarrow a\,c\,a, c \rightarrow a\,c\,a, c \rightarrow b$.

(c) Define the following :

(i) Context-Free and context-sensitive grammars

(ii) Regular set and Reverse Polish Notation

http://www.a2zsubjects.com

http://www.a2zsubjects.com

Join our WhatsApp Channel for FREE Question Papers, Syllabus & Exam Updates
More papers: cguniversities.com | Tap here to join
JOIN NOW >